Environmental Services - Water Quality
Onsite Wastewater Scan Data Entry Form

PERMIT #: C 0 0 7 1 2 5

PIN #: 0 6 8 6 5 7 7 9 4 2

OP DATE: 0 6 / 2 2 / 1 9 8 9

SYSTEM USE:
- [x] House
- [ ] Mobile Home
- [ ] Business
- [ ] Other

SEWAGE TYPE:
- [x] Domestic
- [ ] Industrial

PUMP/SIPHON?:
- [ ] Yes
- [x] No

PRESSURE MANIFOLD:
- [ ] Yes
- [x] No

SYSTEM TYPE:
- [ ] I
- [x] II
- [ ] III
- [ ] IV
- [ ] V
- [ ] VI
- [ ] Other

SUB TYPE:
- [x] A
- [ ] B
- [ ] C
- [ ] D
- [ ] E
- [ ] F
- [ ] G

NBR BEDROOMS:
- [ ] 1
- [ ] 2
- [x] 3
- [ ] 4
- [ ] 5
- [ ] 6
- [ ] Other

MAINT. SCHEDULE:
- [ ] Yes
- [x] No

CERT. OPERATOR
- [ ] Yes
- [x] No

GT	ST	PT	SIZE
☐	☐		750
☐	☐	☐	900
☐	☒	☐	1,000
☐	☐	☐	1,200
☐	☐	☐	1,500
☐	☐	☐	1,800
☐	☐	☐	2,100
☐	☐	☐	2,500
☐	☐	☐	3,000
☐	☐	☐	4,000
☐	☐	☐	5,000
☐	☐	☐	8,000
	☐	☐	10,000
☐	☐	☐	Other
☒		☒	None/NA GT or PT

DRAINFIELD SIZE(SQ. FT.)

0 1 1 0 0

DRAIN TYPE:
- [x] Stone
- [ ] EZ Flow
- [ ] Infiltrator
- [ ] Biodiffuser
- [ ] Cultec
- [ ] Drip
- [ ] Hancor
- [ ] Large Dia. Pipe
- [ ] Multi-Pipe
- [ ] Other

MAX DEPTH (IN.):
- [ ] 12 in. or less
- [ ] 18 in. or less
- [ ] 24 in. or less
- [x] 26 in. or less
- [ ] 28 in. or less
- [ ] 30 in. or less
- [ ] 32 in. or less
- [ ] 36 in. or less
- [ ] Other

STONE DEPTH (IN.):
- [ ] 8 in. or less
- [x] 12 in. or less
- [ ] 18 in. or less
- [ ] 24 in. or less
- [ ] Other

TRENCHES:
- [x] Individual
- [ ] Bed

TRENCH WIDTH (IN.):
- [ ] 12 in. or less
- [ ] 18 in.
- [ ] 24 in.
- [x] 36 in.
- [ ] 6 ft. or less
- [ ] 9 ft. or less
- [ ] Other

11/14/14

WAKE COUNTY HEALTH DEPARTMENT WELL AND SEWAGE SITE, LOCATION PERMIT

Tax Map. No. 856 Parcel No. 110 No. C 07125

Contractor: _____ Operation Permit [ ]

Owner: STEVE ADAMS CONST Date: 3-17-84

Location/Address: 7713 WENTWORTH DRIVE; HWY 401 SOUTH, TL SR 2753 TO HWY 42 E, TR SR 2748 1 S/D ON RT S.R. # 2748

Subdivision Name: MYATT MILL FARMS Lot No. 14 Section or Block No. _____

Zoning: WAKE Township: MIDDLE CREEK

Tax Map No. 856 Parcel No. 110

Sewage System

Repair [ ] Original Permit No. _____

Garbage Disposal Unit Yes [ ] No [ ]

House [X] Mobile Home [ ] Business [ ]

No. Bedrooms 3 Lot Area 1.12 AC

Size of Tank 1000 gal.

Nitrification Line 1200 2 (3'x 200') sq. ft.

Depth of Stone: 12" [X] Max. Depth of Trenches: 26" In.

Riser and Baffle Required [X] Pump Required [ ]

Improvement Permit

*Permit Void 36 months from date of Issuance

*Permit Void if not in compliance with zoning regulations

*Permit may be voided if site alterations made

Layout By: David Brown

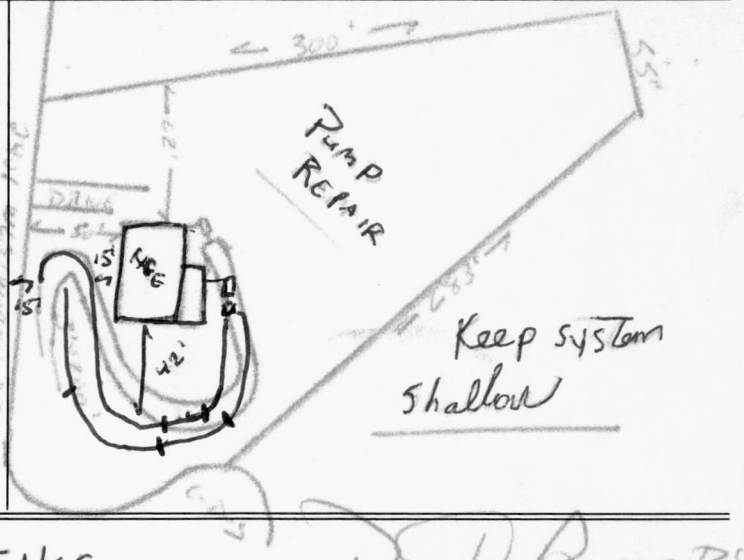

6-22-84 Date

RANDY JONES Installed By

David Brown RS Approved By

Well System

Individual [ ] Semi-Public [ ] Public [X]

New [ ] Replacement [ ] Repair [ ]

Fee Paid Yes [ ] No [ ]

Construction Compliance	Yes	No
Site Approved	[ ]	[ ]
Well Head Approved	[ ]	[ ]
Grouting Approved	[ ]	[ ]

Date Inspected _____ Sanitarian _____

Final Inspection	Yes	No
Required Slab	[ ]	[ ]
Chlorinated	[ ]	[ ]
Required Certificate	[ ]	[ ]
Variance (Explain)	[ ]	[ ]
WCHD I.D. Affixed	[ ]	[ ]
Sample Collected	[ ]	[ ]

**Well permit void 36 months from issuance date

Bacteriological Results

Initial Sample: _____ Date: _____

*Re-sample #1 _____ Date: _____

*Re-sample #2 _____ Date: _____

Re-chlorination as required Yes [ ] No [ ]

Comments: _____

*$10.00 fee for all re-samples

All checks payable to: **Wake County Health Department**

Well Installed By: _____

6-22-84 Date System Finalized

David Brown RS Sanitarian

This report is based in part on information provided by the homeowner or his/her representative in the application submitted for this permit. The sanitarian is not responsible for false or misleading information contained in the application. The sanitarian is also not responsible for concealed conditions on the property or for statements in this report that may have resulted from false or misleading statements provided to him in the application. Neither Wake County nor the sanitarian warrants that the septic tank system will continue to function satisfactorily in the future or that the water supply will remain potable.

OGD—50909

COPY TO HEALTH DEPARTMENT

Lot 14
856-110

L.S @ 10"
C.L. to 36"
SAP > 36" Pember H2O
.3 MAY
- DIVERT SURFACE H2O
- P.N.G.L.
1000/1200 shallow ditch

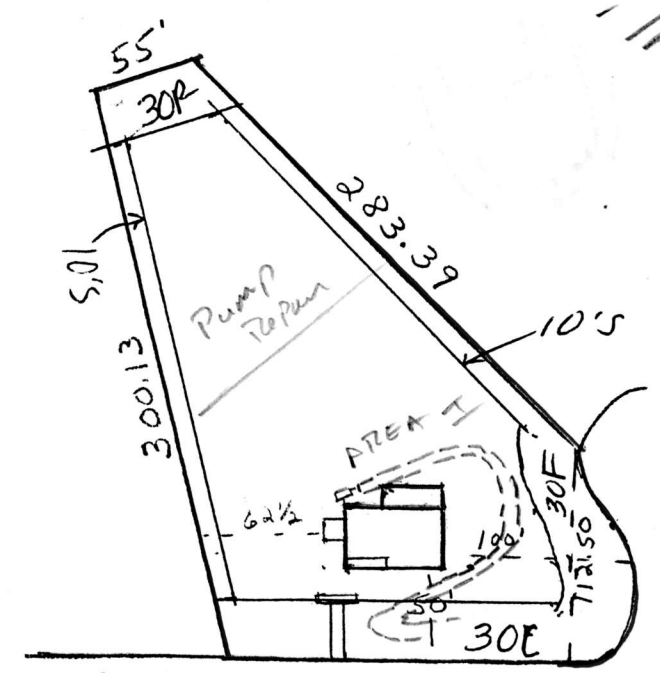

7213 ~~2401~~ WESTWORTH DR

RECEIVED
MAR 10 1989
WAKE CO.
HEALTH DEPT.

Scale 1" = 100'

856-110